STANLEY®
Engineered Fastening

HELI-COIL®
Pipe Thread Inserts

Technical Bulletin 903B

HeliCoil®

Heli-Coil® Pipe Thread Inserts

Improve all pipe connections with Heli-Coil® Brand Inserts

HELI-COIL® Pipe Thread Inserts are precision formed screw thread coils of 18-8 Stainless Steel wire cold rolled into a sharp crescent diamond shaped cross section having a tensile strength in excess of 200,000 psi and a smooth surface of 8 to 16 micro inches.

Prior to installation, the Pipe Thread is larger in diameter that the tapped hole. When installed, it assumes the configuration of the tapped hole, whether NPT, ANPT or NPS. The outward forces resulting from the reduction of the free diameter anchors the insert permanently in place.

The same Heli-CoiL® Insert is used for all three types of pipe thread assemblies. For NPT and NPSC assemblies, Handbook H28 requires gaging the tapped hole with the L_1 and L_3 gages is required. Complete details on installation of Heli-CoiL® NPT an given on p.6.

Pipe Thread Inserts are typically used in OEM, production salvage and in repair & maintenance.

Note:

Heli-Coil® Pipe Thread inserts conform to:

National Pipe Taper Thread (NPT)
Aeronautical National Pipe Taper Thread (ANPT)
National Pipe Straight Coupling Thread (NPSC)

Features and Benefits:

- **Provide Leak Proof Joints** when used with thread sealant and recommended torque
- **Eliminate Thread Failure** due to stripping, vibration, fatigue, corrosion or seizing
- **Prevent Thread Wear** even when after repeated disassembly and re-assembly
- **Greatly Increase Thread Strength** under all operating conditions
- **Yield Substantial Savings** in materials, weight and space, as minimum size bosses and flanges are permissible
- **Offer Speed And Economy** In repair and production salvage, providing better-than-original threads; and HELI-COIL® Pipe Thread Inserts retain original thread size
- **Permit the Use of Light Metals** instead of ferrous castings because connections will be protected by the inserts

Heli-Coil® Pipe Thread Inserts — How They Are Used

Heli-Coil® Pipe Thread inserts are quickly and easily installed following the steps in the Process Sheet on p.6. The procedure consists of these basic operations:

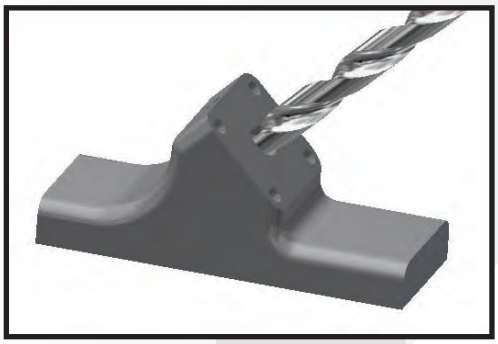

1. DRILL: Using a standard drill (and ream for ANPT)

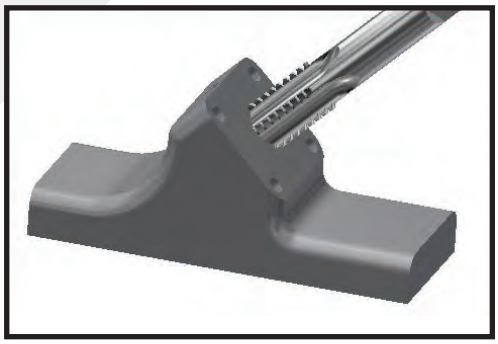

2. TAP: with a Heli-Coil® STI tap

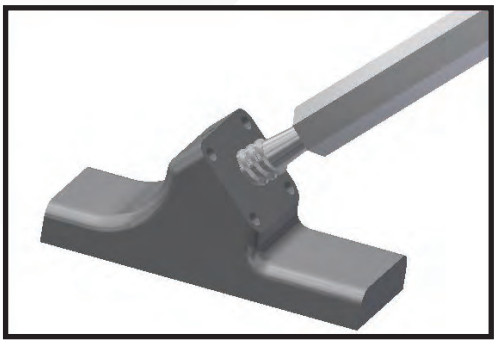

3. GAGE: the hole to recommended tolerance

4. INSTALL: The insert with Heli-Coil® hand or power inserting tools and remove the tang

ASSEMBLY

Extremes of truncation and pitch diameter tolerance can create crest and root (major and minor diameter) clearances which might allow a void and result in "spiral leakage". It is recommended that the normal practice of using sealing compounds be followed when making Heli-Coil® Pipe Thread Insert assemblies.

Design and Installation Data of Heli-Coil® Pipe Thread Inserts for NPT (per Handbook H28) and ANPT (per MIL-P-7105)

DRILLED HOLE						
NOMINAL THREAD SIZE	S DIAMETER				MINIMUM DEPTH	
	REAMING (ANPT)		NO REAMING (NPT)		PLUG TAP (S_P)	BOTTOM TAP (S_B)
	1		2		3	4
1/16-27	K	(.2810)	19/64	(.2969)	0.590	0.465
1/8-27	U	(.3680)	W	(.3860)	0.592	0.466
1/4-18	31/64	(.4844)	33/64	(.5156)	0.833	0.606
3/8-18	0.625	(.6250)	21/32	(.6562)	0.840	0.619
1/2-14	25/32	(.7812)	13/16	(.8125)	1.069	0.775
3/4-14	63/64	(.9844)	1-1/64	(1.0156)	1.074	0.794
1 - 11-1/2	1-1/4	(1.2500)	1-9/32	(1.2812)	1.302	0.972
1-1/4 - 11-1/2	1- 9/32	(1.5937)	1-5/8	(1.6250)	1.330	0.992
1-1/2 - 11-1/2	1 -3/16	(1.8125)	1-55/64	(1.8593)	1.343	0.992

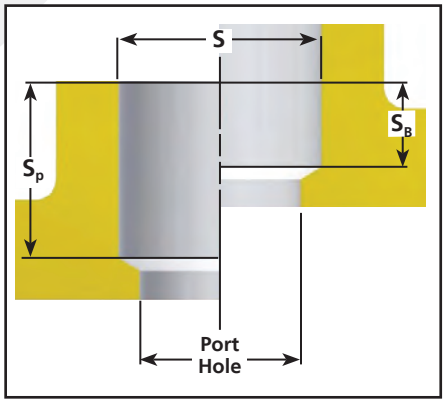

REAMED HOLE			
M DIAMETER		MINUMUM DEPTH*	
MINIMUM	MAXIMUM	PLUG TAP (R_p)	BOTTOM TAP (R_B)
5	6	7	8
0.3038	0.3123	0.517	0.446
0.3963	0.4047	0.519	0.447
0.5265	0.5386	0.676	0.578
0.6619	0.674	0.684	0.590
0.8247	0.8247	0.841	0.726
1.0351	1.0494	0.846	0.745
1.2958	1.3125	1.005	0.892
1.6406	1.6572	1.033	0.912
1.8795	1.8962	1.046	0.912

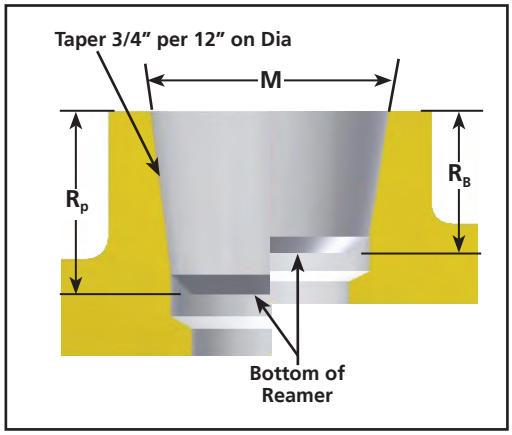

Notes:

(*) Depths of reaming and tapping are reference dimensions only. Actual hole depths are governed by use of pipe thread gages.

D = Outside diameter of pipe – major diameter of pipe thread at L2 from the end of pipe.

E_0 = Basic pitch diameter of thread at the end of pipe = D – (0.05D + 1.1) P.

E_1 = Basic pitch diameter of thread at the end of coupling = E0 + 0.0625L1

E_2 = Basic pitch diameter of thread at L2 from end of pipe = E0 0.0625L2

E_3 = Basic pitch diameter of thread at L3 from end of pipe = E0 – 0.1875P.

L_1 = Normal engagement by hand between external and internal threads

L_2 = Effective length of external thread = P(0.8D + 6.8).

L_3 = Normal wrench take-up.

$L_1 + L_3$ = Effective length of internal threads
Nominal insert length
Minimum full thread depth in blind holes
Minimum boss thickness for through holes

INSERT IDENTIFICATION					
NOMINAL THREAD SIZE	PART NO.	NOMINAL LENGTH	FREE NO. OF COILS (From Notch)	FREE OUTSIDE DIAMETER	
				Maximum	Minimum
1-1/16-27	327-1	0.271	5-1/8	0.405	0.385
1/8-27	327-2	0.273	5-1/8	0.511	0.486
1/4-18	327-4	0.394	5	0.680	0.655
3/8-18	327-6	0.407	5-1/4	0.828	0.803
1/2-14	327-8	0.534	5-3/8	1.035	1.005
3/4-14	327-12	0.553	5-5/8	1.262	1.232
1-11-1/2	327-16	0.661	5-1/2	1.575	1.540
1-1/4-11-1/2	327-20	0.681	5-3/4	1.947	1.912
1-1/2-11-1/2	327-24	0.681	5-7/8	2.205	2.170

Design and Installation Data of Heli-Coil® Pipe Thread Inserts for NPT (per Handbook H28) and ANPT (per MIL-P-7105)

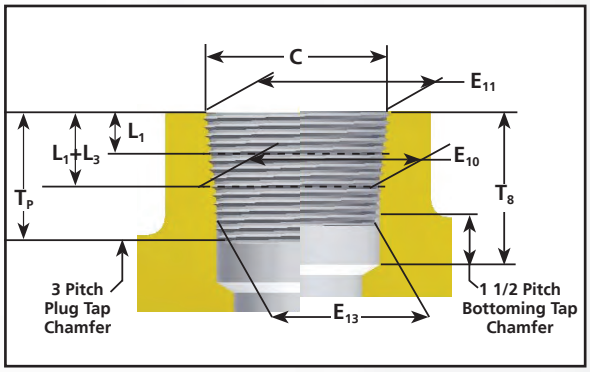

TAPPED HOLE

PITCH DIAMETERS			MAJOR DIA. MAX	MINIMUM DEPTH	
				PLUG TAP	BOTTOM TAP
E10	E11	E13	(C)	(T_P)	(T_B)
10	11	12	13	14	15
.32528	.33528	.31834	.367	.534	.408
.41761	.42770	.41066	.459	.536	.409
.55967	.57391	.54925	.621	.749	.568
.69429	.70929	.68388	.757	.756	.580
.86579	.88579	.85240	0947	.962	.740
1.0750	1.0962	1.0617	1.157	.966	.759
1.3453	1.3703	1.3290	1.445	1.172	.929
1.6888	1.7151	1.6725	1.790	1.200	.949
1.9278	1.9540	1.9115	2.029	1.213	.949

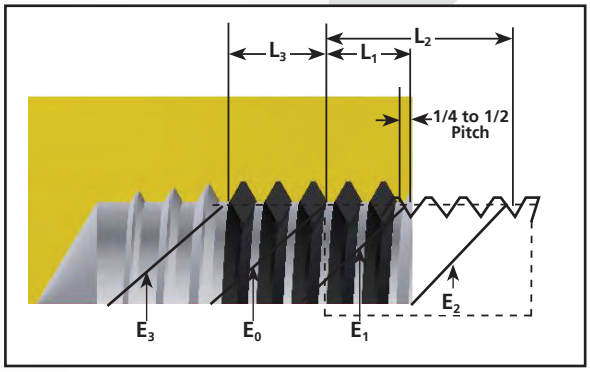

ASSEMBLED INSERT SPECIFICATIONS

BASIC LENGTHS			BASIC PITCH DIAMETERS				
L_1	L_2	$L_1 + L_3$	E_0	E_1	E_2	E_3	D
16	17	18	19	20	21	22	23
.160	.26111	.27111	.27118	.28118	.28750	.26424	.3125
.1615	.26385	.27261	.36351	.37360	.38000	.35656	.405
.2278	.40178	.39447	.47739	.49163	.50250	.46697	.540
.240	.40778	.40667	.61201	.62701	.63750	.60160	.675
.320	.53371	.53429	.75843	.77843	.79179	.74504	.840
.339	.54571	.55329	.96768	.98887	1.00179	.95429	1.050
.400	.68278	.66087	1.21363	1.23863	1.25630	1.19733	1.315
.420	.70678	.68087	1.55713	1.58338	1.60130	1.54083	1.660
.420	.72348	.68087	1.79609	1.82234	1.8410	1.77978	1.990

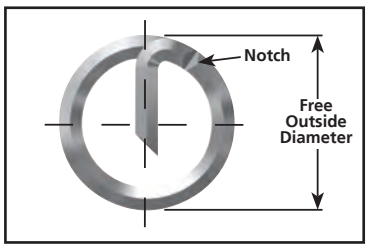

TOOL PART NUMBERS

NOMINAL THREAD SIZE	REAMER	TAP*		GAGES			INSERTING TOOL	EXTRACTING TOOL
		PLUG	BOTTOM	PLAIN TAPER PLUG	L_1 THREAD PLUG	L_3 THREAD PLUG		
	24	25	26	27	28	29	30	31
1/16-27	334-1	328-1	3328-1	332-1	330-1	331-1	3371-1	1227-6
1/8-27	334-2	328-2	3328-2	332-2	330-2	331-2	3371-2	1227-16
1/4-18	334-4	328-4	3328-4	332-4	330-4	331-4	3371-4	1227-16
3/8-18	334-6	328-6	3328-6	332-6	330-6	331-6	3371-6	1227-16
1/2-14	334-8	328-8	3328-8	332-8	330-8	331-8	3371-8	1227-16
3/4-14	334-12	328-12	3328-12	332-12	330-12	331-12	3371-12	1227-24
1-11-1/2	334-16	328-16	3328-16	332-16	330-16	331-16	3371-16	1227-24
1-1/4-11-1/2	334-20	328-20	3328-20	332-20	330-20	331-20	3371-20	1227-32
1-1/2-11-1/2	334-24	328-24	3328-24	332-24	330-24	331-24	3371-24	1227-32

*May also be used in aluminium, cast iron, mild steel, and brass for limited production. Production taps for these and other materials are available on special order.

PROCESS SHEET

Installation of HELI-COIL® Pipe Thread Inserts for NPT and ANPT

Operation	ANPT	NPT	PROCEDURE
	See pages 4-5		
Drilling	Col.1	Col. 2	Standard shop practice is followed. Variations in material, drills and drilling equipment may make larger or smaller drills necessary to produce acceptable threads. Drill to depth given in Col. 3 or 4.
Taper Reaming	Col.24		Use standard reaming procedure. Check hole with plain taper plug gage (part number shown in Col 27). Ream to depth shown in Col. 7 or 8.
Tapping	Col.25 or 26		Follow standard tapping procedure. HELI-COIL® Pipe Tread taps are wrapped with a strand of copper wire to indicate approximate tapping depth. Actual depth and size must be controlled by gaging. Tap to depth given in Col. 14 or 15.
Gaging	Col.27		**Plain taper plug:** Used to check taper, roundness and diameter at the crest of thread
	Col.28		**L_1 thread plug:** Used to check diameter, lead, form ad taper of threads at that portion of thread which will be engaged when the male thread part is screwed in by hand. This is the only gage used when working to NPT. Tapped hole must be within MIN and MAX steps on L_1 gage.
	Col29		**L_3 thread plug:** Used to check diameter lead, form ad taper of threads at lower portion of hole – those threads that will be engaged by wrench pressure.
			ANPT GAGING PROCEDURE
	L_1 Gage 		ANPT gaging requires the use of L_1 and L_3 and plain taper plug gages. L_1 and L_3 gages have notches denoting Maximum (MX) Basic (B) and Minimum (MN). The plain taper plug gage has three additional notches which indicate truncation tolerances: Maximum Tolerance (MXt), Basic Tolerance (Bt) and Minimum Tolerance (MNt). The use of these gages establishes an acceptable threaded hole as Maximum, Basic or Minimum.
	L_3 Gage 		First, gage the hole with the gage, noting the actual position of the steps in relation to the hole. If the Minimum step reaches the edge of the hole, the hole is classified Minimum. If L_1 stops at Basic or Maximum, the hole is classified either Basic or Maximum. Now gage the hole with the L_3 gage checking that the proper step comes into the same relative position with the edge of the hole that the L_1 did. The L_3 gage must not vary more than ½ turn from the position established by the L_1 gage.
	Plain Gage 		Finally, check the hole with the plain taper gage. The edge of the hole must come between the Minimum (MN) and Minimum Tolerance (MNt) steps if Minimum is what the L_1 gage showed the hole to be. (If the L_1 showed the hole to be Basic, the plain plug would have to be between B and Bt; if L_1 were Maximum, the plain plug would have to be between MX and MXt). **Gaging of the assembled insert is not necessary if this procedure has been followed.**
Inserts	Pages 4-5		The same HELI-COIL® Inserts are used for both ANPT and NPT.
Installation	Col.30		Threaded mandrel prewinder type inserting tools are used. Appropriate instructions are furnished with each tool. Install insert ¼ to ½ P below surface.
Tang Removal			Using long nosed pliers, grasp the tang. Push in and pull out to snap the tang off at the notch.
Assembly			It is recommended that an appropriate non-hardening paste type sealing compound be used with ANPT and NPT pipe threads. Service factors such as machining accuracy, type of fluid or gas flowing through the connection, pressures, temperature and pipe material will determine the type of sealant best suited for the individual application.
Torque			After applying thread compound to male thread, assemble male thread into installed insert using the following tightening torques, per MIL-T-5542:

1/16-27	100 Inch Pounds	¾-14	950 Inch Pounds
1/8-27	150 Inch Pounds	1-11½	1800 Inch pounds
1/4-18	250 Inch Pounds	1¼-11½	Tighten as necessary
3/8-18	450 Inch Pounds	1½-11½	Tighten as necessary
1/2-14	600 Inch Pounds		

Heli-Coil® Inserts For Straight Pipe Thread Couplings (NPSC)

The NPSC system was developed for the use of a straight internal thread with a tapered external thread. The thread form and the truncation are the same as those in the NPT system, and NPT gages are used. Internal NPSC threads are straight (parallel), made by NPSC taps. These threads are for low-pressure usage, and require sealants or lubricants.

DRILLING AND TAPPING

NSPC threads have pitch diameter tolerances larger than major and minor diameter truncations limits Consequently, to obtain tapped holes within specifications, proper drill size selection is important. In most cases, the drill sizes recommended in Table II on p.8 will be satisfactory.

Shop conditions, equipment and the type of parent material can affect drilling and tapping results, causing oversize or undersize holes. Therefore, NPSC taps specifically designed and manufactured by Heli-Coil® are recommended for controlled root tapping.

GAGING

L_1 taper thread plug gagers are used in NPSC threads. The gage must enter the tapped hole within plus or minus 1-1/2 turns of the Basic notch. It is not necessary to gage the assembled insert because of the precision of the Heli-Coil® wire form.

ASSEMBLY

The use of an appropriate non-hardening, paste-type sealing compound is recommended in all Pipe Thread Insert connections. Service factors such as machining accuracy, type of fluid or gas flowing through the connection, pressures, temperature and pipe material will determine the type of sealant best suited for the individual application.

1/16-27	100 Inch Pounds	¾-14	950 Inch Pounds
1/8-27	150 Inch Pounds	1-11½	1800 Inch pounds
1/4-18	250 Inch Pounds	1¼-11½	Tighten as necessary
3/8-18	450 Inch Pounds	1½-11½	Tighten as necessary
1/2-14	600 Inch Pound		

STANLEY
Engineered Fastening

HeliCoil®

Design and Installation Data of HELI-COIL® Pipe Thread Inserts for NPSC (per Handbook H28)

Table I: Insert Indentification

NOMINAL THREAD SIZE	PART NO.	NOMINAL LENGTH	FREE # OF COILS (Counted From Notch)	FREE OUTSIDE DIAMETER	
				Maximum	Minimum
1/8-27	327-2	.273	5-1/8	.511	.486
1/4-18	327-4	.394	5	.680	.655
3/8-18	327-6	.407	5-1/4	.828	.803
1/2-14	327-8	.534	5-3/8	1.035	1.005
3/4-14	327-12	.553	5-5/8	1.262	1.232
1-11-1/2	327-16	.661	5-1/2	1.575	1.540

Table II: Tapped Hole Specifications

NOMINAL THREAD SIZE	MINOR DIAMETER MINIMUM	SUGGESTED DRILL SIZE	MINIMUM DRILL DEPTH* (for plug tap)	PITCH DIAMETER		MAJOR DIAMETER MAXIMUM (ref.)	FULL TAPPED THREADS ($L_1 + L_3$)
				Minimum	Maximum		
1/8-27	.392	X (.3970)	.476	.4247	.4307	.461	.273
1/4-18	.522	17/32 (.5312)	.700	.5692	.5786	.623	.394
3/8-18	.657	21/32 (.6562)	.712	.7046	.7140	.759	.407
1/2-14	.820	13/16 (.8125)	.927	.8796	.8920	.950	.534
3/4-14	1.030	1-1/32 (1.031)	.946	1.0901	1.1025	1.160	.553
1-11-1/2	1.290	1-19/64 (1.297)	1.139	1.3627	1.3780	1.448	.661

*Drilling depths given are basic depths for tapping conditions indicated, and allow for insert installation 1/4 to 1/2 pitch below surface of boss. Depths of countersinking, which is optional, should be added to the applicable drilling and tapping depths. A 120° included angle countersink, to the tap major diameter ± .015, is recommended. This countersink will have an approximate depth of 1/2 pitch.

Table III: Tool Part Numbers

NOMINAL THREAD SIZE	PLUG TAP	L_1 THREAD PLUG GAGE	INSERTING TOOL	EXTRACTING TOOL
1/8-27	848-2	330-2	3371-2	1227-16
1/4-18	848-4	330-4	3371-4	1227-16
3/8-18	848-6	330-6	3371-6	1227-16
1/2-14	848-8	330-8	3371-8	1227-16
3/4-14	848-12	330-12	3371-12	1227-24
1-11-1/2	848-16	330-16	3371-16	1227-24

STANLEY Engineered Fastening
4 Shelter Rock Lane
Danbury, Connecticut 06810

USA
T (877) 364-2781
F (800) 225-5614

Canada: (800) 268-9947
México: + 52-55-5326-7100